TYPICAL TRANSOM DETAIL AT VISION AREA

ALTERNATIVE -ONE

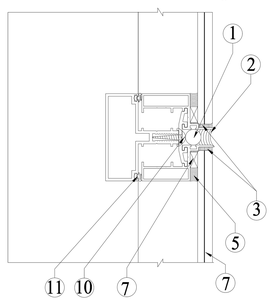

ALTERNATIVE - TWO

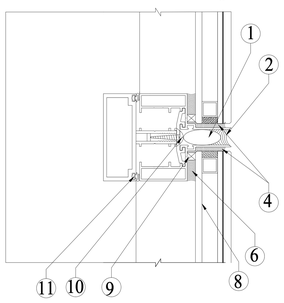

S.No	DETAIL	S.No	DETAIL
1.	BACKER ROD OF SUPREME INDUSTRIES MAKE	6.	STRUCTURAL SILICONE SEALANT WITH BITE OF _mm & GLUE LINE OF _mm DC-983 (TWO PART) OR DC- 995 (SINGLE PART) OF DOWCORNING OR SSG-4400 (TW□ PART) □R SSG - 4000 (SINGLE PART) □F GE SILICON
2.	WEATHER SILICON SEALANT DC-991 OF DOWCORNING OR SILPRUF NB OF GE SILICONES WIDTH _mm DEPTH _mm	7.	LAMINATED GLASS AS PER SPEC. 6 + (0.38 TO 1.52 PVB) + 4
3.	WEATHER SILICON SEALANT DC-991 OF DOWCORNING OR SILPRUF NB OF GE SILICONES WIDTH _mm DEPTH _mm	8.	HERMATICALLY SEALED DOUBLE GLASS UNIT AS/SPEC DOUBLE GLAZING TO BE DONE WITH SECONDARY SEAL DEPTH OF 6mm USING DC- 982 OF DOWCORNING OR IGS- 3723 OF GE SILICONES
4.	WEATHER SILICON SEALANT DC-991 OF DOWCORNING OR SILPRUF NB OF GE SILICONES WIDTH _mm DEPTH _mm	9.	BOTH SIDE ADHESIVE TAPE NORTON MAKE V-2100 SERIES
5.	STRUCTURAL SILICONE SEALANT WITH BITE OF _mm & GLUE LINE OF _mm DC-983 (TWO PART) OR DC- 995 (SINGLE PART) OF DOWCORNING OR SSG-4400 (TW□ PART) □R SSG - 4000 (SINGLE PART) □F GE SILICON	10.	S.S. SCREW 14X19mm REFER PANEL FIXING DRW.
		11.	EPDM GASKET □F HANU INDUSTRIES

NOTES:-

DRWN	VINOD	DATE:	SCALE:
CHCKD	MANISH	DRG. NO 22	
APRVD	G.K.V.	REV. NO.	

ACADEMIC INFORMATION ON DESIGN ASPECTS OF STRUCTURAL GLAZING

TITLE
TYPICAL TRANSOM DETAIL AT VISION

NEMCON FACADE CONSULT
Plot No. 569 SECTOR 5, VAISHALI, GHAZIABAD 201 012
Ph.: 91-120 - 4371643
Mob: 9313372927
E.Mail: nemconfacade@yahoo.co.in

TYPICAL TRANSOM DETAIL AT SPANDREL AND VISION AREA

ALTERNATIVE -ONE

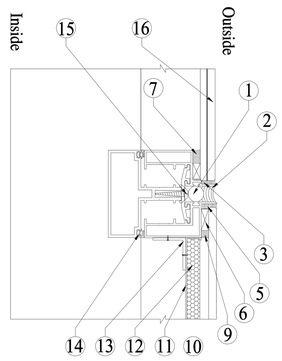

ALTERNATIVE - TWO

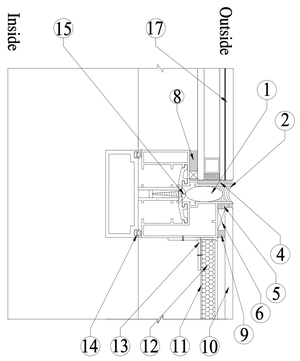

S.No	DETAIL	S.No	DETAIL
1.	BACKER ROD OF SUPREME INDUSTRIES MAKE	9.	STRUCTURAL SILICONE SEALANT WITH BITE OF _mm & GLUE LINE OF _mm DC-983 (TWO PART) OR DC- 995 (SINGLE PART) OF DOWCORNING OR SSG-4400 (TW□ PART) □R SSG - 4000 (SINGLE PART) □F GE SILICON
2.	WEATHER SILICON SEALANT DC-991 OF DOWCORNING OR SILPRUF NB OF GE SILICONES WIDTH _mm DEPTH _mm	10.	GLASS AS/SPEC.
3.	WEATHER SILICON SEALANT DC-991 OF DOWCORNING OR SILPRUF NB OF GE SILICONES WIDTH _mm DEPTH _mm	11.	20 GUAGE THICK G.I. TRAY
4.	WEATHER SILICON SEALANT DC-991 OF DOWCORNING OR SILPRUF NB OF GE SILICONES WIDTH _mm DEPTH _mm	12.	10mmTHICK CHEMICALLY CROSS LINKED CLOSED CELL POLYETHYLENE FOAM WITH ONE SIDE ADHESIVE INSULATION OF TROCELLEEN / SUPREME INDUSTRIES (SILXLC)
5.	WEATHER SILICON SEALANT DC-991 OF DOWCORNING OR SILPRUF NB OF GE SILICONES WIDTH _mm DEPTH _mm	13.	25X25X3mm THICK ALUMINIUM ANGLE 50mm LONG AT A SPACING OF 300mm FIXED WITH 2 NOS. ALUMINIUM RIVETS TO TRAY AND 2 NOS. OF 8X12.5 P.H.S.S. SCREW TO PROFILE
6.	BOTH SIDE ADHESIVE TAPE NORTON MAKE V-2100 SERIES	14	EPDM GASKET □F HANU INDUSTRIES
7.	STRUCTURAL SILICONE SEALANT WITH BITE OF _mm & GLUE LINE OF _mm DC-983 (TWO PART) OR DC- 995 (SINGLE PART) OF DOWCORNING OR SSG-4400 (TW□ PART) □R SSG - 4000 (SINGLE PART) □F GE SILICON	15.	S.S. SCREW 14X19mm REFER PANEL FIXING DRW.
8.	STRUCTURAL SILICONE SEALANT WITH BITE OF _mm & GLUE LINE OF _mm DC-983 (TWO PART) OR DC- 995 (SINGLE PART) OF DOWCORNING OR SSG-4400 (TW□ PART) □R SSG - 4000 (SINGLE PART) □F GE SILICON	16.	HERMATICALLY SEALED DOUBLE GLASS UNIT AS/SPEC DOUBLE GLAZING TO BE DONE WITH SECONDARY SEAL DEPTH OF 6mm USING DC- 982 OF DOWCORNING OR IGS- 3723 OF GE SILICONES
		17.	LAMINATED GLASS AS PER SPEC. 6 + (0.38 TO 1.52 PVB) + 4

NOTES:-

DRWN	VINOD	DATE:	SCALE:
CHCKD	MANISH	DRG. NO 23	
APRVD	G.K.V.	REV. NO.	

ACADEMIC INFORMATION ON DESIGN ASPECTS OF STRUCTURAL GLAZING

TITLE
TYPICAL TRANSOM DETAIL AT SPANDREL AND VISION AREA

NEMCON FACADE CONSULT
Plot No. 569 SECTOR 5, VAISHALI, GHAZIABAD 201 012
Ph.: 91-120 - 4371643
Mob: 9313372927
E.Mail: nemconfacade@yahoo.co.in